DWG NO.: YL130836 REV 0

ISSUE NO.:

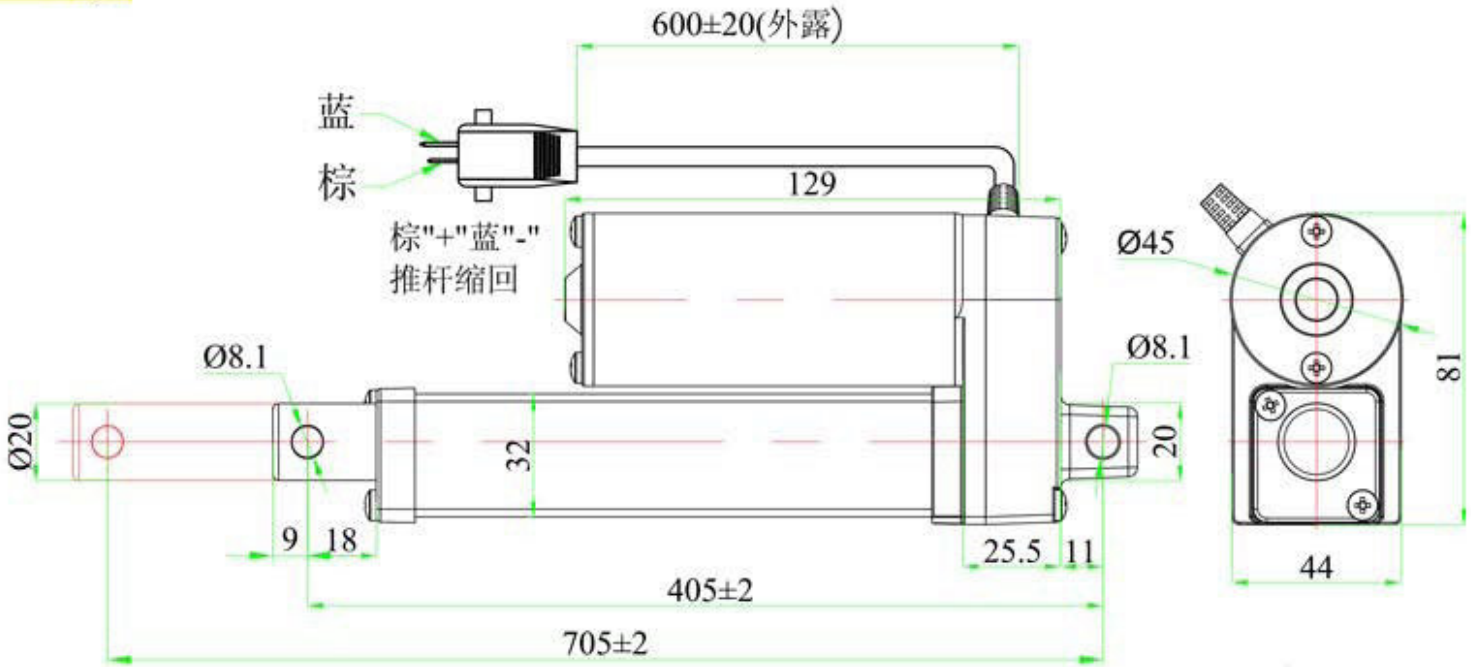

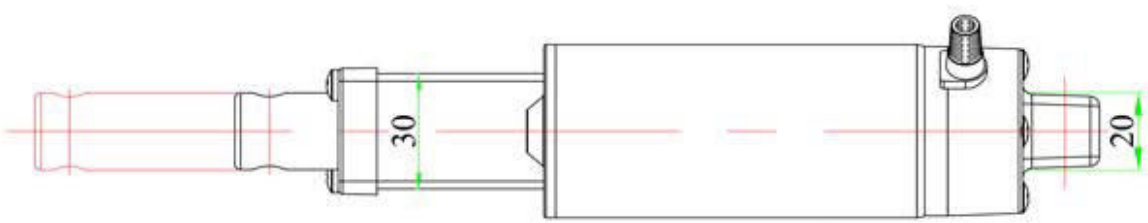

Carga máxima: 1000 N (aprox. 100 Kg)
Velocidad: 20 mm ± 2mm / s

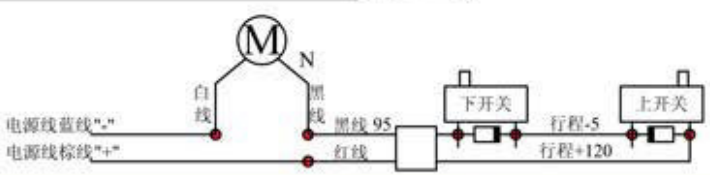

REV.	WAS	DATE	DES'D	APP'D

DWG-4A

MMAC300: Versión 12V
MMAC324: Versión 24V

TITLE: 电动推杆 (Linear actuator)

PART NO.: MMAC300-MMAC324

DES'D
CHK'D
REV'D
APP'D
SCALE