© 2023 TE Connectivity. All Rights Reserved.

REVISIONS					
P	LTR	DESCRIPTION	DATE	DWN	APVD
	AC1	TOLERANCE ADDED FOR DIMENSION 0.63	17JUN2019	SS	PS
	AC2	NOTE 1 0.76 µm PLATING UPDATE (PdNi+AuFLASH)	10JUL2023	BGC	PS
	AC3	PART OBSOLESCENCE	19DEC2024	RS	VG

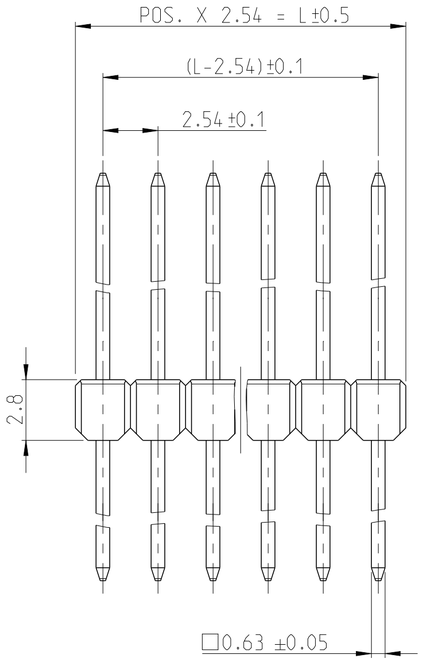

"F" = GOLD AREA

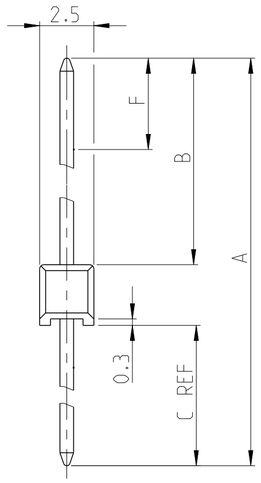

DIMENSION					PART- NO.		PART- NO.		PART- NO.	
					SELECTIVE GOLD PLATED	7	TIN PLATED	7	SELECTIVE GOLD PLATED	7
A	B	C	F	-	1 5 7	WEIGHT POS. PER ROW	2 5 7	WEIGHT POS. PER ROW	3 4 7	WEIGHT POS. PER ROW
12.7	6.7	3.2	4.4	-	826629	0.0654 g	826926	0.0656 g		
12.0	6.7	2.5	4.4	-	826630	0.0629 g	8 826935	0.0632 g		
11.8	5.8	3.2	4.4	-	826646	0.0622 g	826936	0.0625 g	8 829070	0.0621 g
11.1	5.8	2.5	4.4	-	826647	0.0597 g	826937	0.0600 g		
14.0	8.0	3.2	4.4	-	826648	0.0699 g	826938	0.0703 g		
13.3	8.0	2.5	4.4	-	826649	0.0674 g	8 826939	0.0678 g		
12.7	6.7	3.2	5.5	-	-	-	-	-	8 828356	0.0653 g

CONTACT PIN	CuZn	SEE TABLE
PIN HOUSING	PBT GV	SEE TABLE
DESCRIPTION	MATERIAL	FABRE/COLOR/PLATING/SURFACE

NOTES:

1. MATING SIDE : AREA "F" MIN 0.76 µm (PdNi + Au FLASH) 1.27 µm NICKEL BY AREA "B"
   (Alternative plating - Min 0.76 µm Au OVER 1.27 µm Ni)
   SOLDER SIDE: MIN 3 µm TIN OVER 1.27 µm NICKEL

2. MATING AND SOLDER SIDE : MIN 3 µm TIN OVER 1.27 µm NICKEL

3. MATING SIDE: AREA "F" 0.13 µm GOLD OVER 1.27 µm NICKEL BY AREA "B"
   SOLDER SIDE: MIN 3 µm TIN OVER 1.27 µm NICKEL

4. COLOR OF HOUSING: GREY

5. COLOR OF HOUSING: GREEN

6. TOLERANCES NOT CUMULATIVE

7. THE NUMBER OF POSITION PER ROW HAS TO BE ADDED TO THE BASE NO. AS A DASH NO.
   EG: 2-826629-0 = 20 POSITIONS

   THE NUMBER OF POSITIONS PER ROW IS ALSO THE FACTOR FOR THE WEIGHT DETERMINATION
   E.G: 20 X 0.0654 g = 1.308 g

8. OBSOLETE

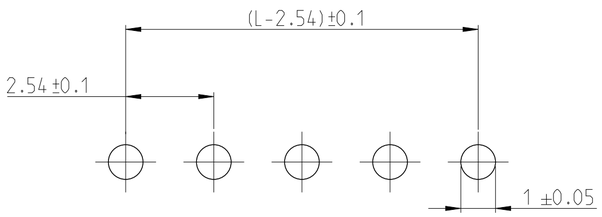

SCALE 8:1

LAYOUT FOR HOLES ON PCB

THIS DRAWING IS A CONTROLLED DOCUMENT.

DIMENSIONS: mm

TOLERANCES UNLESS OTHERWISE SPECIFIED: ±0.2mm 6

0 PLC ±
1 PLC ±
2 PLC ±
3 PLC ±
4 PLC ±
ANGLES ±

MATERIAL: SEE TABLE

FINISH: -

DWN: G.HOLAUS 10NOV1989
CHK: SCHAARSCHMIDT M.
APVD: -
PRODUCT SPEC: 108-18012
APPLICATION SPEC: 114-25011
WEIGHT: -

TE Connectivity

NAME: AMPMODU II PIN HEADER, SINGLE ROW, DUAL ROW, VERTICAL AND RIGHT ANGLE MOUNT

SIZE	CAGE CODE	DRAWING NO	RESTRICTED TO
A2	00779	C-826629	-

CUSTOMER DRAWING | SCALE 5:1 | SHEET 1 OF 4 | REV AC3

© 2023 TE Connectivity. All Rights Reserved.

REVISIONS					
P	LTR	DESCRIPTION	DATE	DWN	APVD
		SEE SHEET 1			

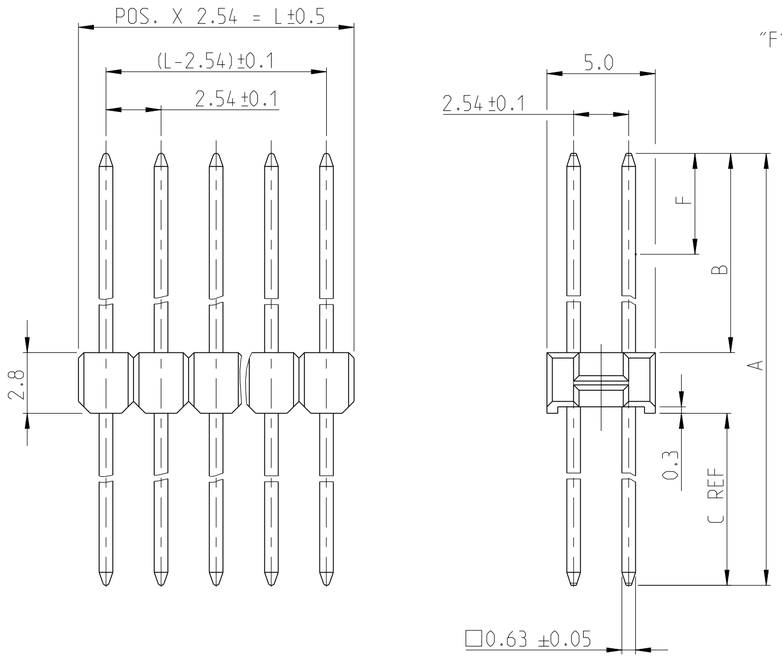

"F" = GOLD AREA

DIMENSION					PART-NO.		PART- NO.		PART- NO.	
					SELECTIVE GOLD PLATED	7	TIN PLATED	7	SELECTIVE GOLD PLATED	7
A	B	C	F	-	1 5 7	WEIGHT POS. PER ROW	2 5 7	WEIGHT POS. PER ROW	3 4 7	WEIGHT POS. PER ROW
12.7	6.7	3.2	5.5	-	826632	0.1276 g	826925	0.1279 g	8 828420	0.1272 g
12.0	6.7	2.5	4.4	-	826633	0.1226 g	826941	0.1229 g		
11.8	5.8	3.2	4.4	-	826656	0.1212 g	826942	0.1217 g	8 828533	0.1209 g
11.1	5.8	2.5	4.4	-	8 826657	0.1162 g	826943	0.1165 g		
14.0	8.0	3.2	4.4	-	826658	0.1366 g	826944	0.1370 g		
13.3	8.0	2.5	4.4	-	826659	0.1316 g	8 826945	0.1323 g		

CONTACT PIN	CuZn	SEE TABLE
PIN HOUSING	PBT GV	SEE TABLE
DESCRIPTION	MATERIAL	FABRE/COLOR/PLATING/SURFACE

NOTES:

1. MATING SIDE : AREA "F" MIN 0.76 µm (PdNi + Au FLASH)
(Alternative plating - Min 0.76 µm Au plating)
OVER 1.27 µm NICKEL BY AREA "B"
SOLDER SIDE: MIN 3 µm TIN OVER 1.27 µm NICKEL

2. MATING AND SOLDER SIDE : MIN 3 µm TIN OVER 1.27 µm NICKEL

3. MATING SIDE: AREA "F" 0.13 µm GOLD OVER 1.27 µm NICKEL
BY AREA "B"
SOLDER SIDE: MIN 3 µm TIN OVER 1.27 µm NICKEL

4. COLOR OF HOUSING: GREY

5. COLOR OF HOUSING: GREEN

6. TOLERANCES NOT CUMULATIVE

7. THE NUMBER OF POSITION PER ROW HAS TO BE
ADDED TO THE BASE NO. AS A DASH NO.
EG: 2-826632-0 = 20 POSITIONS

THE NUMBER OF POSITIONS PER ROW IS ALSO THE FACTOR
FOR THE WEIGHT DETERMINATION
E.G: 20 X 0.1276 g = 2.552 g

8. OBSOLETE

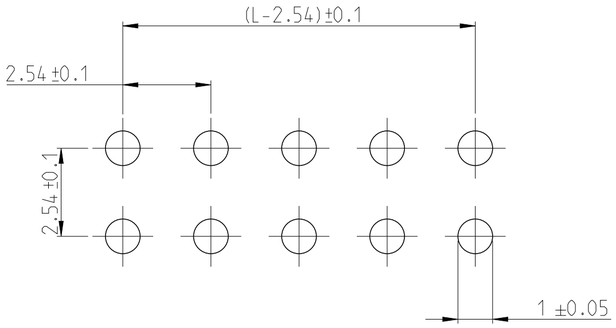

SCALE 8:1

LAYOUT FOR HOLES ON PCB

THIS DRAWING IS A CONTROLLED DOCUMENT.

DIMENSIONS: mm

TOLERANCES UNLESS OTHERWISE SPECIFIED: ±0.2mm 6
0 PLC ±
1 PLC ±
2 PLC ±
3 PLC ±
4 PLC ±
ANGLES ±

MATERIAL: SEE TABLE
FINISH: -

DWN G.HOLAUS 10NOV1989
CHK SCHAARSCHMIDT M. -
APVD -
PRODUCT SPEC 108-18012
APPLICATION SPEC 114-25011
WEIGHT -

TE Connectivity

NAME: AMPMODU II PIN HEADER, SINGLE ROW, DUAL ROW, VERTICAL AND RIGHT ANGLE MOUNT

SIZE	CAGE CODE	DRAWING NO	RESTRICTED TO
A2	00779	C-826629	-

CUSTOMER DRAWING | SCALE 5:1 | SHEET 2 OF 4 | REV AC3

© 2023 TE Connectivity. All Rights Reserved.

REVISIONS					
P	LTR	DESCRIPTION	DATE	DWN	APVD
		SEE SHEET 1			

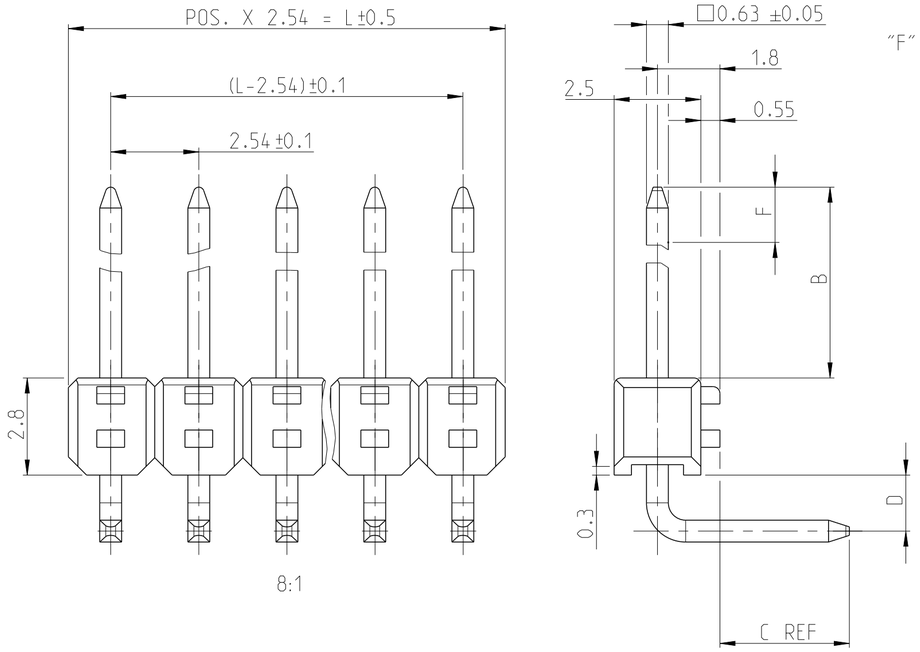

"F" = GOLD AREA

DIMENSION					PART-NO.		PART- NO.		PART- NO.	
					SELECTIVE GOLD PLATED	7	TIN PLATED	7	SELECTIVE GOLD PLATED	7
B	C	D	F	-	1 5 7	WEIGHT POS. PER ROW	5 7	WEIGHT POS. PER ROW	3 4 7	WEIGHT POS. PER ROW
6.7	3.2	1.3	4.4	-	826631	0.0757 g	826947 2	0.0760 g		
6.7	2.5	1.3	4.4	-	826651	0.0731 g	826948 2	0.0735 g		
5.8	3.2	1.3	4.4	-	826652	0.0726 g	826949 2	0.0728 g	8 829071	0.0726 g
5.8	2.5	1.3	4.4	-	826653	0.0701 g	826950 2	0.0704 g		
8.0	3.2	1.3	4.4	-	826654	0.0803 g	826951 2	0.0807 g		
8.0	2.5	1.3	4.4	-	826655	0.0777 g	9 826952 10	0.0782 g		
6.7	3.2	1.3	5.5	-	-	-	-	-	8 828419	0.0758 g

CONTACT PIN	CuZn	SEE TABLE
CONTACT PIN	CuSn6 9	SEE TABLE
PIN HOUSING	PBT GV	SEE TABLE
DESCRIPTION	MATERIAL	FABRE/COLOR/PLATING/SURFACE

NOTES:

1. MATING SIDE : MIN 0.76µm (PdNi + Au FLASH)
(Alternative plating - Min 0.76µm Au plating)

OVER 1.27µm NICKEL BY AREA "B"
SOLDER SIDE: MIN 3µm TIN OVER 1.27µm NICKEL

2. MATING AND SOLDER SIDE : MIN 3µm TIN OVER 1.27µm NICKEL

3. MATING SIDE: AREA "F" 0.13µm GOLD OVER 1.27µm NICKEL
BY AREA "B"
SOLDER SIDE: MIN 3µm TIN OVER 1.27µm NICKEL

4. COLOR OF HOUSING: GREY

5. COLOR OF HOUSING: GREEN

6. TOLERANCES NOT CUMULATIVE

7. THE NUMBER OF POSITION PER ROW HAS TO BE
ADDED TO THE BASE NO. AS A DASH NO.
EG: 2-826631-0 = 20 POSITIONS

THE NUMBER OF POSITIONS PER ROW IS ALSO THE FACTOR
FOR THE WEIGHT DETERMINATION
E.G: 20 X 0.0757 g = 1.514 g

8. OBSOLETE

10. MATING AND SOLDER SIDE : 2µm TIN OVER 1.27µm NICKEL

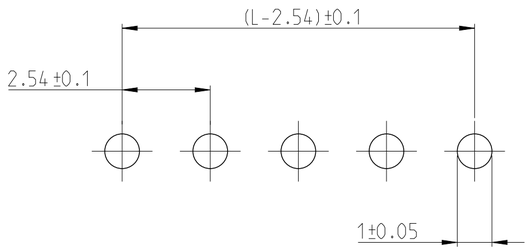

SCALE 8:1
LAYOUT FOR HOLES ON PCB

THIS DRAWING IS A CONTROLLED DOCUMENT.

DIMENSIONS: mm

TOLERANCES UNLESS OTHERWISE SPECIFIED: ±0.2mm 6
0 PLC ±
1 PLC ±
2 PLC ±
3 PLC ±
4 PLC ±
ANGLES ±

MATERIAL: SEE TABLE
FINISH: -

DWN G.HOLAUS 10NOV1989
CHK SCHAARSCHMIDT M. -
APVD - -
PRODUCT SPEC 108-18012
APPLICATION SPEC 114-25011
WEIGHT -

TE Connectivity

NAME: AMPMODU II PIN HEADER, SINGLE ROW, DUAL ROW, VERTICAL AND RIGHT ANGLE MOUNT

SIZE	CAGE CODE	DRAWING NO	RESTRICTED TO
A2	00779	C-826629	-

CUSTOMER DRAWING | SCALE 5:1 | SHEET 3 OF 4 | REV AC3

© 2023 TE Connectivity. All Rights Reserved.

REVISIONS					
P	LTR	DESCRIPTION	DATE	DWN	APVD
		SEE SHEET 1			

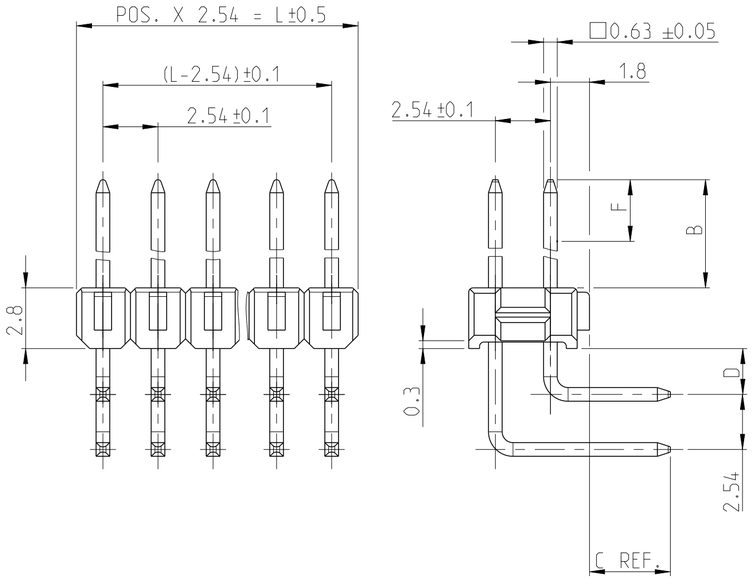

"F" = GOLD AREA

DIMENSION					PART-NO.		PART- NO.		PART- NO.	
					SELECTIVE GOLD PLATED	7	TIN PLATED	7	SELECTIVE GOLD PLATED	7
B	C	D	F	-	1 5 7	WEIGHT POS. PER ROW	2 5 7	WEIGHT POS. PER ROW	3 4 7	WEIGHT POS. PER ROW
6.7	3.2	1.3	4.4	-	826634	0.1646 g	826953	0.1656 g	8 828418	0.1651 g
6.7	2.5	1.3	4.4	-	8 826661	0.1597 g	8 826954	0.1606 g		
5.8	3.2	1.3	4.4	-	826662	0.1587 g	826955	0.1603 g	8 829072	0.1587 g
5.8	2.5	1.3	4.4	-	826663	0.1538 g	8 826956	0.1542 g		
8.0	3.2	1.3	4.4	-	826664	0.1741 g	826957	0.1749 g		
8.0	2.5	1.3	4.4	-	826665	0.1687 g	8 826958	0.1699 g		

CONTACT PIN	CuZn	SEE TABLE
PIN HOUSING	PBT GV	SEE TABLE
DESCRIPTION	MATERIAL	FABRE/COLOR/PLATING/SURFACE

NOTES:

1. MATING SIDE : AREA "F" MIN 0.76 µm (PdNi + Au FLASH)
(Alternative plating - Min 0.76 µm Au plating)
OVER 1.27 µm NICKEL BY AREA "B"
SOLDER SIDE: MIN 3 µm TIN OVER 1.27 µm NICKEL

2. MATING AND SOLDER SIDE : MIN 3 µm TIN OVER 1.27 µm NICKEL

3. MATING SIDE: AREA "F" 0.13 µm GOLD OVER 1.27 µm NICKEL
BY AREA "B"
SOLDER SIDE: MIN 3 µm TIN OVER 1.27 µm NICKEL

4. COLOR OF HOUSING: GREY

5. COLOR OF HOUSING: GREEN

6. TOLERANCES NOT CUMULATIVE

7. THE NUMBER OF POSITION PER ROW HAS TO BE
ADDED TO THE BASE NO. AS A DASH NO.
EG: 2-826634-0 = 20 POSITIONS

THE NUMBER OF POSITIONS PER ROW IS ALSO THE FACTOR
FOR THE WEIGHT DETERMINATION
E.G: 20 X 0.1646 g = 3.292 g

8. OBSOLETE

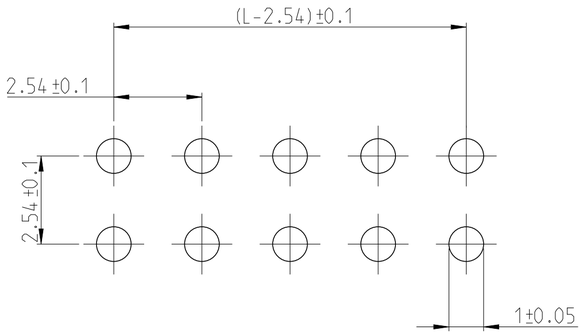

SCALE 8:1
LAYOUT FOR HOLES ON PCB

THIS DRAWING IS A CONTROLLED DOCUMENT.

DIMENSIONS: mm

TOLERANCES UNLESS OTHERWISE SPECIFIED: ±0.2mm 6
0 PLC ±
1 PLC ±
2 PLC ±
3 PLC ±
4 PLC ±
ANGLES ±

MATERIAL: SEE TABLE
FINISH: -

DWN: G.HOLAUS 10NOV1989
CHK: SCHAARSCHMIDT M.
APVD: -
PRODUCT SPEC: 108-18012
APPLICATION SPEC: 114-25011
WEIGHT: -

TE Connectivity

NAME: AMPMODU II PIN HEADER, SINGLE ROW, DUAL ROW, VERTICAL AND RIGHT ANGLE MOUNT

SIZE	CAGE CODE	DRAWING NO	RESTRICTED TO
A2	00779	C-826629	-

CUSTOMER DRAWING | SCALE 5:1 | SHEET 4 OF 4 | REV AC3