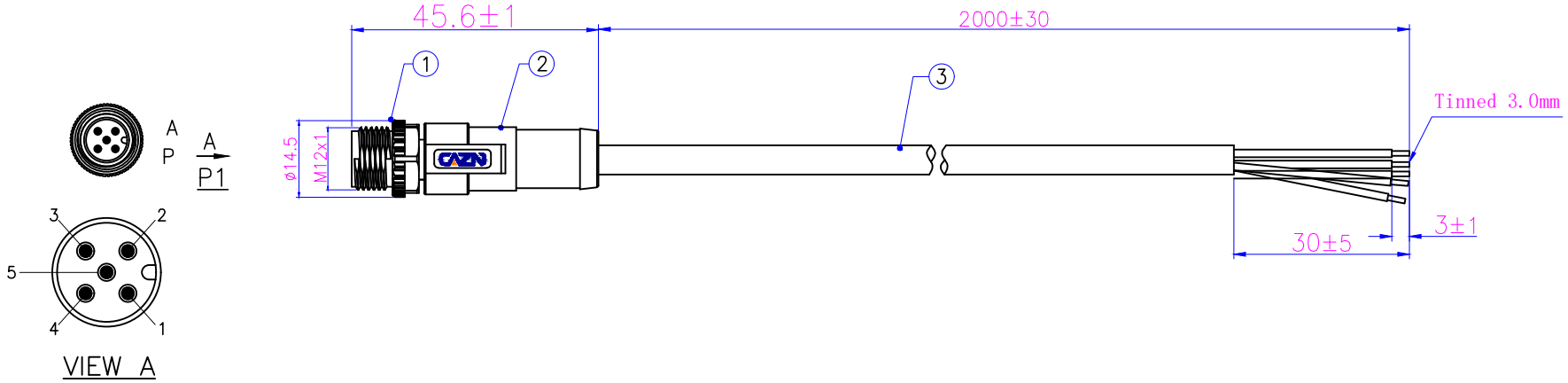

Cutting length (mm)	Left-end processing (mm)			Right-end processing (mm)		
	Exfoliation	Core peeling	Tinned	Exfoliation	Core peeling	Tinned

Matters needing attention in production

Connector General Specifications	
Connector locking system	Screw
Termination	Solder
Temperature range	-40°C~+80°C
Class of pollution	3
Degree of protection	IP67
Machenical mating	≥500
Rated voltage	60V AC/DC
Rated current	4A
Contact resistance	≤5 mΩ
Insulation resistance	≥100 MΩ
IEC standard	IPC-A-620
Test requirements for electrical parameters of products	
Test voltage	
Insulation resistance	
Conductor resistance	

Wire Diagram

P1	Wire Color	P2
1	Brown	
2	White	
3	Blue	
4	Black	
5	Grey	

No.	Specification	Unit	Q'ty
3	UL20549 5CX22AWG(17/0.16TS)+Tissue paper,inner core PVC OD:1.3, Black Mist on the outside(GS0827-ZC)90A TPU polyether flame retardant FT2(coarse hemp good viscosity), OD:5.0 (Brown, White, Blue, Black, Grey) , P/N: SD-140619-029 (5C22-006)	pc	1
2	M12 overmolding TPU black	pc	1
1	M12 male plug semi-finished 5-core:2CA1-M12-SF-P5	pc	1

Statement: Please confirm and return the drawings within 2 working days. If the drawings are not returned after the expiration date, the default is that you have been confirmed to be qualified.

Business confirmation

RoHS

Customer		DWN NO		DATE	DWN	APVD
P/N				2024-06-22	Zixiang.Zhou	
Product Name				UNIT: mm	Size:A4	

GENERAL TOLERANCE (UNLESS SPECIFIED)

≤10	±0.1
<10~≤20	±0.2
<20~≤50	±0.5
Angle	±3°

THIRD ANGLE

DWN			
CHK			
APVD		TITLE	M12-A-P5-2M-PUR
UNIT MM	REV A	PART NO	
SIZE A4	SHEET 1 OF 1	DRAWING NO	