No.	Specification	Unit	Q'ty	No.	Specification	Unit	Q'ty
1	M12 Male contact pin Gold Plated OD:1.0	pc	4	7	Straight body PG7 specification plastic case	pc	1
2	M12 Zinc alloy hexagon connection screws	pc	1	8	Waterproof rubber plug Silicone Rubber PG7 black	pc	1
3	M12 Male Insulator 5 core A code ,PA66 material black	pc	1	9	Tail paw PA66 PG7 specification black	pc	1
4	Nitrile butadiene rubber ϕ15*ϕ12.6*1.2 black	pc	1	10	Lock cable nut, plastic case PG7	pc	1
5	Plastic housing for body connection nuts	pc	1				
6	Wire locking screw Carbon steel M2.5*0.45*4.4 bright Nickel	pc	4				

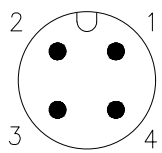

VIEW A

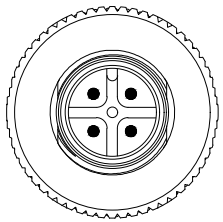

A

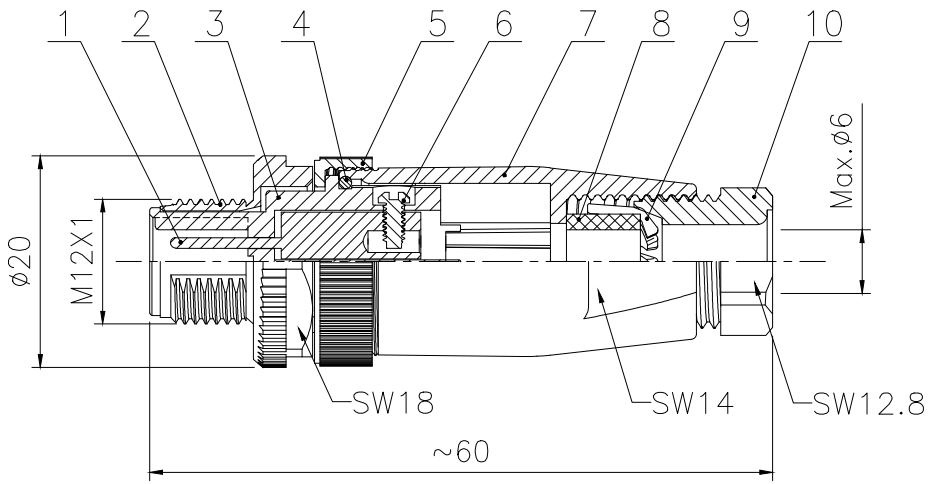

Technical specifications:		Electrical parameter:	
Coupling:	Threaded coupling	Rated voltage:	250V AC/DC
Termination:	Screw lock	Rated current:	4A
Coding:	A	Contact resistance:	≤5 mΩ
Pollution degree:	3	Insulation resistance:	≥100 MΩ
Temperature range:	−40°C ~ +80°C	Materials:	
Degree of protection:	IP67	Shell material:	Nylon/Zinc alloy nickel plated
Mating cycles:	≥500	Contact material:	Copper Gold plated
Cable outlet diameter:	4.0~6.0mm	Insert material:	PA66+GF UL94 black
Traverse area:	Max 2.0mm²/AWG 14	Sealing:	Silicone/NBR, black

All materials are RoHS compliant

GENERAL TOLERANCE (UNLESS SPECIFIED)	
≤10	±0.1
<10~≤20	±0.2
<20~≤50	±0.5
Angle	±1°

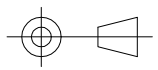

THIRD ANGLE

DWN W.M	DATE 2023.6.20		
CHK	DATE		
APVD	DATE	TITLE	M12 plastic assembly male plug 4 core (PG7)
UNIT MM	REV A	PART NO	
SIZE A4	SHEET 1 OF 1	DRAWING NO	M12P−A1−P4−PG7