ISSUE	ADAFRUIT INDUSTRIES	© 2014
DRAWN KTOWN	TITLE	REV A
CHECKED >CHECKED	DATE 6/20/2014 2:34:36 PM	DRG Nº >DRGNO
DATE >DATE	FILE: PowerBoost 500C	PAGE: 1/1

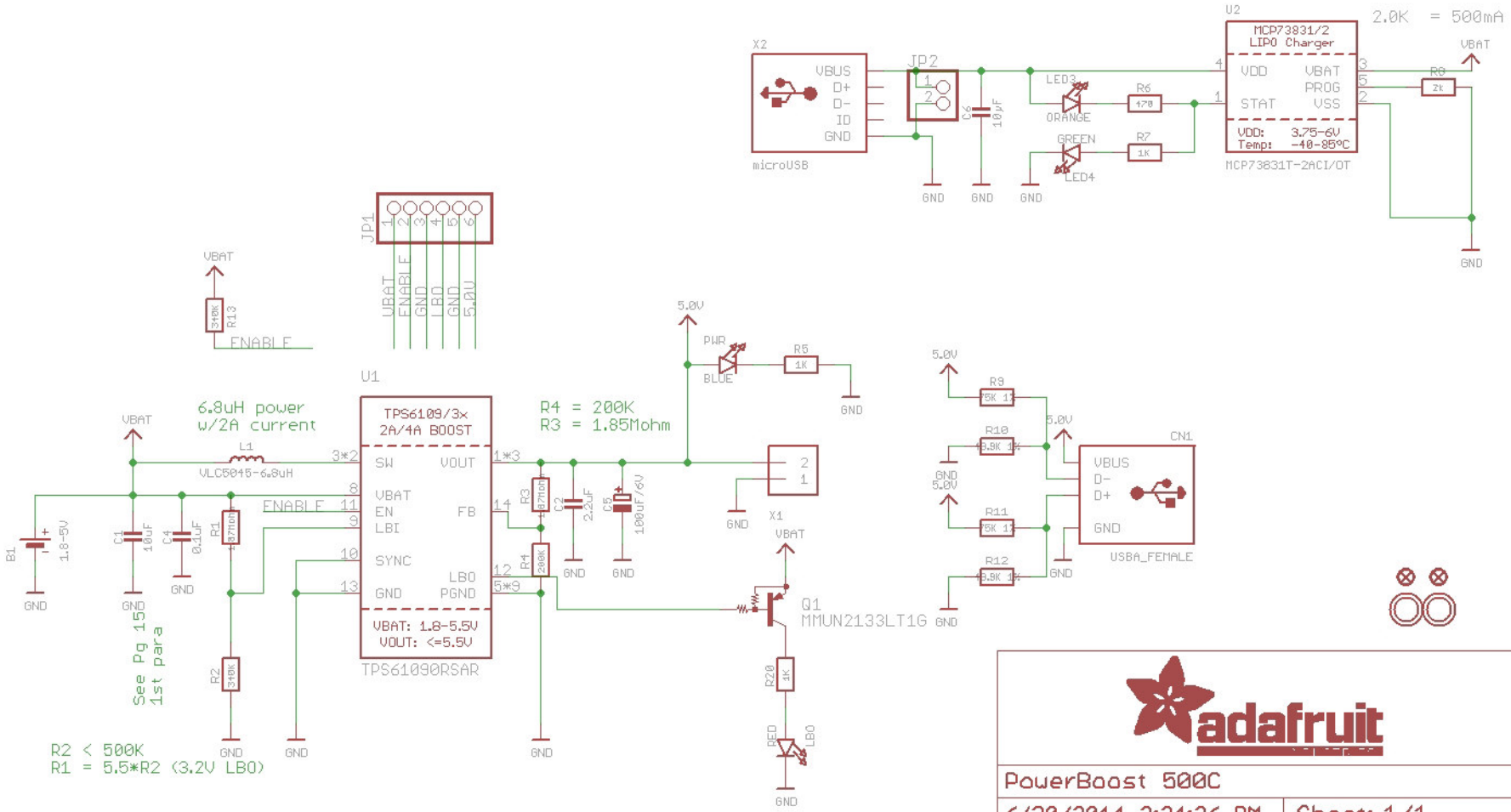

PowerBoost 500C	
6/20/2014 2:34:36 PM	Sheet: 1/1
Drawing: >AUTHOR	Adafruit Industries